KWC BEVO
Trim kit - lever mixer - tub

Modell-Linie: BEVO | 20.424.550.175
Showers | Exposed bath mixer

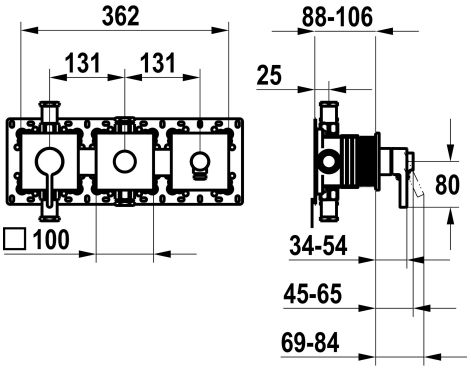

KWC-No.	Farbcode
125295 chromeline, with safety device DIN EN 1717	chromeline
3600018607 brushed gold, with safety device DIN EN 1717	brushed gold
3600008115 matt black, with safety device DIN EN 1717	matt black
3600008123 brushed steel, with safety device DIN EN 1717	brushed steel
3600018611 brushed copper, with safety device DIN EN 1717	brushed copper
3600018608 brushed graphite, with safety device DIN EN 1717	brushed graphite

NEW

* Trim kit with function unit KWC HOMEBOX
* Outflow
- with integrated hose connection
- above or below for the second consumer with CHOICE diverter without automatic reset
* KWC cartridge M 35-S HF
- with ceramic discs
- flow rate and temperature continuously variable

* Scope of delivery:
- Lever mixer unit
- Diverter unit
- Hose connection unit
- Fastening of the cover plate without screws
* To be ordered separately:
- Unit for concealed installation KWC HOMEBOX Thermostatic/ lever mixer 2 consumers 39.006.261.931

Technical Data

Durchflussmenge	19.2 l/min (3 bar)
Brauseabgang: Auslaufmenge	15.2 l/min (3 bar)
Bedienung	frontbedient
Farbcode	brushed gold
Installationsart	Wandmontage
Artikeltyp	Hebelmischer
Armaturengeräuschgruppe	II
Unterputz	FM-Set, mit SI DIN EN 1717
Brauseabgang: Armaturengeräuschgruppe	I
Energieetikette (CH)	C
Material	Messing
Höhe maximal	100 mm
Breite maximal	362 mm

C

Spare Parts

KWC BEVO
Trim kit - lever mixer - tub

Modell-Linie: BEVO | 20.424.550.175
Showers | Exposed bath mixer

Control cartridge

537602
Z.537.602