KWC
Coude mural

Modell-Linie: SHOWERCULTURE | 26.000.613.177
Douches | Accessoires

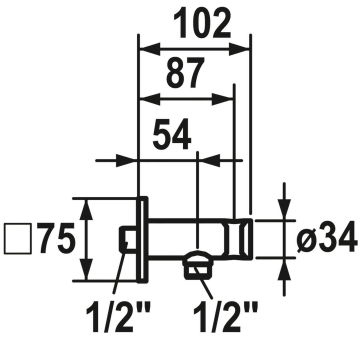

KWC-No.	Farbcode
122543 chromeline	chromeline
3600013513 brushed gold	brushed gold
125548 matt black	matt black
3600011510 brushed steel	brushed steel
3600013528 brushed copper	brushed copper
3600013514 brushed graphite	brushed graphite

* Coude mural
avec support fixe intégré

* Anti-refoulement intégré
* Raccord ½"

Données techniques

Anschluss	G ½"
Farbcode	brushed steel
Installationsart	Wandmontage
Artikeltyp	Schlauchanschluss
Material	Messing
Höhe maximal	75 mm
Breite maximal	75 mm
Länge maximal	54 mm
Armaturengeräuschgruppe	I
teamNumber	727864.583
sanitasTroeschNumber	6544 126.490