KWC ONO E
Lever mixer – Washbasin

Modell-Linie: ONO E | 12.578.041.700FL
Taps | Manual taps

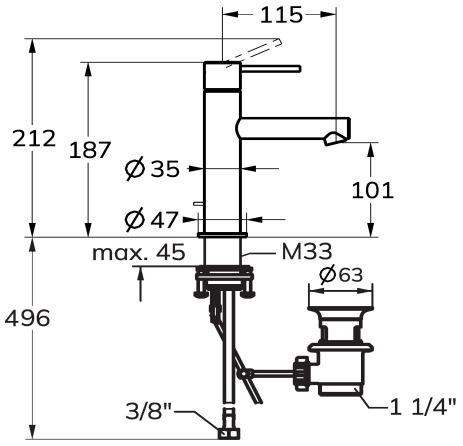

KWC-No.	Color code
125614 chromeline, A 115, flexible connection hoses, with pop-up valve	chromeline
125615 stainless steel, A115, flexible connection hoses, with pop-up valve	stainless steel

NEW

* Lever mixer
* Made of stainless steel
* EcoProtect - water-saving device
* Fixed spout
- Neoperl® Caché® SSR, swivelling jet regulator
* KWC cartridge S 25
- with ceramic discs
- flow rate and temperature continuously variable
* Flexible connection hoses ⅜"
* QuickInstallation - Fastening via threaded connection with locking screws
* Mounting hole size ø35 mm
* Scope of delivery:
- KWC pop-up valve Z.538.581.177

Technical Data

Flow rate	4.3 l/min (3 bar)
pop-up valve	with pop-up valve
Connection	Flexible connection hoses
Spout	fixed
Handling	top lever
Color code	stainless steel
Installation type	Pillar installation
Faucet_typ	Lever mixer
Measure Height	187
Acoustic group	I
Projection A	A 115
Energy label	A
Dimension Water outlet	101
material	stainless steel

Spare Parts

KWC ONO E
Lever mixer – Washbasin

Modell-Linie: ONO E | 12.578.041.700FL
Taps | Manual taps

Cartridge S 25

538711
Z.536.032

Service key Neoperl © Caché ©, TJ, 18 mm, green

634729
Z.634.729

Pop-up valve

3600004125
Z.538.581.177