KWC MANA
Lever mixer - Basin

Modell-Linie: MANA | 12.558.051.000FL
Taps | Manual taps

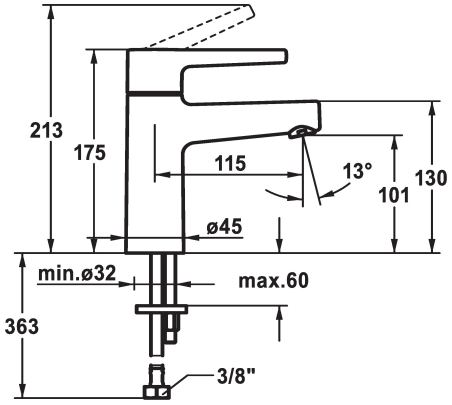

KWC-No.

125519
chromeline, A 115, flexible connection hoses, with Push Open

125520
chromeline, A 115, flexible connection hoses, without pop-up valve

* Lever mixer
* EcoProtect - water-saving device
* Fixed spout
- Neoperl® Perlator® SSR, swivelling jet regulator
* KWC cartridge M 35 OP
- with ceramic discs
- flow rate and temperature continuously variable
* Flexible connection hoses ⅜"
* Fastening by means of stud bolt M8 x 1
* Mounting hole size ø35 mm

Technical Data

Flow rate	5 l/min (3 bar)
Pop-up_valve	without pop-up valve
Connection	Flexible connection hoses
Spout	fixed
Handling	top lever
Color_code	chrome
Installation_type	Pillar installation
Faucet_typ	Lever mixer
Dimension Height	175
G_Acoustic group	I
Projection_A	A 115
Dimension Water outlet	101
material	Brass

Spare Parts

KWC MANA
Lever mixer - Basin

Modell-Linie: MANA | 12.558.051.000FL
Taps | Manual taps

Cartridge M 35 OP

538331
Z.537.710