KWC MANA
Lever mixer - Basin

Modell-Linie: MANA | 12.558.051.000FL
Umyvadlové armatury | Hydraulické armatury

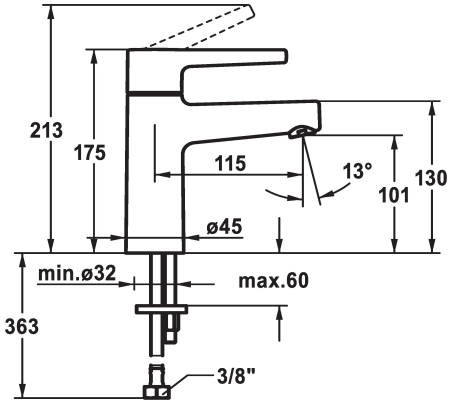

KWC-No.
125519 chromeline, A 115, flexible connection hoses, with Push Open
125520 chromeline, A 115, flexible connection hoses, without pop-up valve

* Lever mixer
* EcoProtect - water-saving device
* Fixed spout
- Neoperl® Perlator® SSR, swivelling jet regulator
* KWC cartridge M 35 OP
- with ceramic discs
- flow rate and temperature continuously variable
* Flexible connection hoses ⅜"
* Fastening by means of stud bolt M8 x 1
* Mounting hole size ø35 mm

Technické údaje

A_Spout_Spray	5 l/min (3 bar)
ATT-KWC-ABLAUFGARNITUR	ohne_Ablaufgarnitur
Connection	Flexible_Anschlussschläuche
ATT-KWC-AUSLAUF	fixovaná
Handling	topbedient
ATT-KWC-FARBCODE	chromeline
Installation_type	Standmontage
Faucet_typ	Hebelmischer
Measure_Height	175
G_Acoustic group	I
Projection_A	A115
ATT-KWC-MASS-WASSERAUSTRITT	101
Materiál	mosaz

Náhradní díly

KWC MANA
Lever mixer - Basin

Modell-Linie: MANA | 12.558.051.000FL
Umyvadlové armatury | Hydraulické armatury

Cartridge M 35 OP

538331
Z.537.710