KWC FIT

Lever mixer - Basin - CoolFix

Modell-Linie: FIT | 12.548.032.000FL

Taps | Manual taps

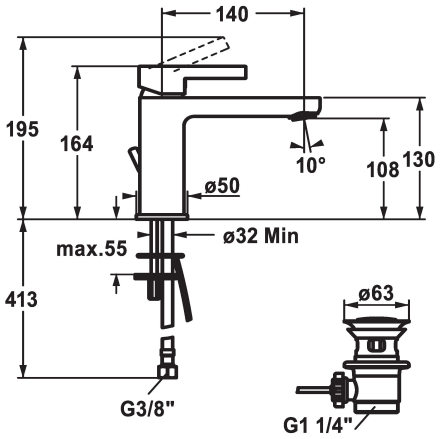

KWC-No.	pop-up valve
125419 chromeline, A 140, flexible connection hoses, with pop-up valve	with pop-up valve
125420 chromeline, A 140, flexible connection hoses, without pop-up valve	without pop-up valve

* Lever mixer
* CoolFix - Cold water flow with a centered lever
* EcoProtect - water-saving device
* Fixed spout
- Neoperl® Perlator®
* OptimalSpace - ample space for washing or working
* KWC cartridge M 35 OP

- with ceramic discs
- flow rate and temperature continuously variable
- temperature limitation
* Flexible connection hoses 3/8"
* Fastening by means of stud bolt 2x M6 x 1
* Mounting hole size ø35 mm

Technical Data

Flow rate	5 l/min (3 bar)
pop-up valve	with pop-up valve
Connection	Flexible connection hoses
Spout	fixed
Handling	top lever
Color code	chromeline
Installation type	Pillar installation
Faucet_typ	Lever mixer
Measure Height	164
Energysaving	Coolfix
Acoustic group	I
Projection A	A 140
Energy label	A
Dimension Water outlet	108
material	Brass

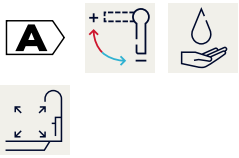

Spare Parts

KWC FIT
Lever mixer - Basin - CoolFix

Modell-Linie: FIT | 12.548.032.000FL
Taps | Manual taps

Cartridge M 35 OP

538331
Z.537.710