KWC FIT
Lever mixer - basin - CoolFix

Modell-Linie: FIT | 12.548.031.000FL
Taps | Manual taps



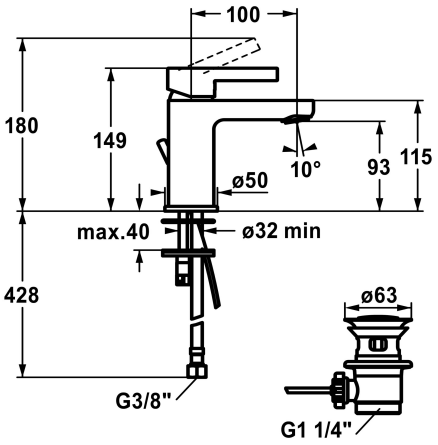

KWC-No.	Color code
125416 chromeline, A 100, flexible connection hoses ⅜", with pop-up valve	chromeline
3600008564 matt black, A 100, flexible connection hoses ⅜", with Push Open	matt black

* Lever mixer
* CoolFix - Cold water flow with a centered lever
* EfficientFlow - integrated flow control
* Fixed spout
- Neoperl® Perlator®
* KWC cartridge M 35 OP
- with ceramic discs
- flow rate and temperature continuously variable
- temperature limitation
* Flexible connection hoses 3/8"
* Fastening by means of stud bolt M8 x 1
* Mounting hole size ø35 mm
* Scope of delivery:
- KWC pop-up drain Z.538.581.000

Technical Data

Waste valve	with pop-up valve
Connection	Flexible connection hoses ⅜"
Spout	Fixed
Color code	chromeline
Installation_type	Pillar installation
Article type	Lever mixer
material	Brass
Projection A	100 mm
Maximum height	149 mm
Minimum water outlet	93 mm
CoolFix	Yes
Operating position	Top lever
Handling	Manually
Acoustic group	I
Energy Label (CH)	A
Flow rate	5 l/min (3 bar)



Spare Parts

KWC FIT
Lever mixer - basin - CoolFix

Modell-Linie: FIT | 12.548.031.000FL
Taps | Manual taps



Cartridge

538331
Z.537.710