KWC HOMEBOX
Unit for concealed installation

Modell-Linie: HOMEBOX | 39.006.261.931
Suihkut ja suihkupaneelit | Perusasennussarjat suihkuille

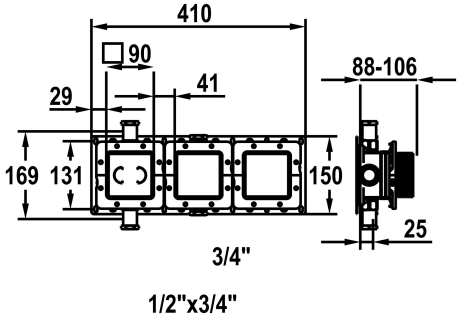

KWC-No.

125287
raw, ½" thread, with shut-off valve, unit for concealed installation

NEW

* Concealed unit compact
* Made of dezincification-resistant material
* Integrated shut-off valves
* With sound decoupling
* Connecting thread ¾"
- (1x stopper ¾" and 2x reductions ¾" - ½" incl. in delivery)
* Scope of delivery:
- Mounting box and protective cap incl. sealing sleeve EN18534
- Multifix fastening system
- Mounting ring set Z.538.805
* Suitable for:
- KWC HOMEBOX Thermostatic mixer / lever mixer 2 consumers
* Installation materials concealed unit (to be ordered separately):
- Mounting rail Z.538.900
* Installation materials trim kit (to be ordered separately):
- Extension set 10 mm (1 pc.) Thermostatic / lever mixer 2 consumers Z.538.807
- escutcheon extension 10 mm (1pce.) Z.639.489.000

Tekniset tiedot

Connection	G1/2",_mit_Vorabsperrung
Värikoodi	F931
Installation_type	Seinäasennus
Faucet_typ	Vormontageeinheit
ATT-KWC-UNTERPUTZ	Unterputz
Materiaali	Messinki
IviCode	0