KWC VITA PRO 2.0
Lever mixer - Kitchen

Modell-Linie: VITA PRO 2.0 | 10.521.033.000FL
Taps | Manual taps

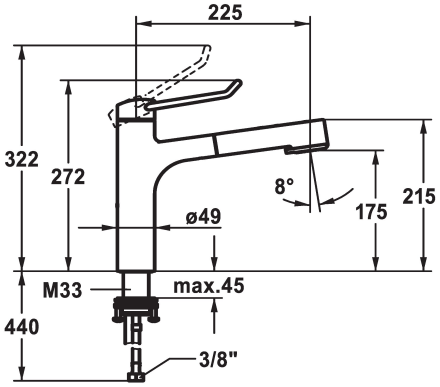

KWC-No.	Dimension Height
125247 chromeline, A 225, flexible connection hoses	272
125248 chromeline, A 225, flexible connection hoses	283

* Lever mixer
* Operation designed for a secure grip, as well as safe and easy handling
* Ergonomic and robust operating lever, made of polyamide
- to adjust the handling even better to suit personal requirements, the offset lever can be installed so that it is twisted into the cap (standard: see illustration)
* TouchProtect - anti-scald protection thanks to the “double skin” principle
* Intrinsically safe against backflow
* Pull-out spray
- SprayClean - easy to clean and actively prevents limescale buildup
- up to 600 mm pull-out length
- TripleClean - Normal, soft, and power stream modes
- hose surface to fit faucet surface
- QuickConnect - Simple hose connection system
* Hose guide, swivelling 120°
* EasyLock - a pull-out spray that easily slides back into place
* OptimalSpace - ample space for washing or working
* KWC cartridge with safety device M 35 OP
- with ceramic discs
- flow rate and temperature continuously variable
- temperature limitation
* Flexible connection hoses 3/8"
* QuickInstallation - Fastening via threaded connection with locking screws
* Mounting hole size ø35 mm

Technical Data
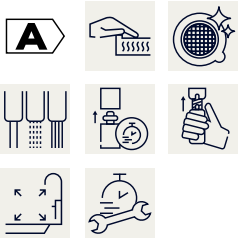
Flow rate needle spray	9 l/min (3 bar)
Flow rate normal spray	8 l/min (3 bar)
Connection	Flexible connection hoses
Spout	swivel
Handling	top lever
Kitchenspray	Pull-out spray
Color code	chromeline
Installation type	Pillar installation
Faucet_typ	Lever mixer
Dimension Height	272
Acoustic group	I
Projection A	A 225
Energy label	A
Dimension Water outlet	175
material	Brass