KWC VITA PRO 2.0
Lever mixer - Basin

Modell-Linie: VITA PRO 2.0 | 12.528.042.000LLFL
Umyvadlové armatury | Hydraulické armatury

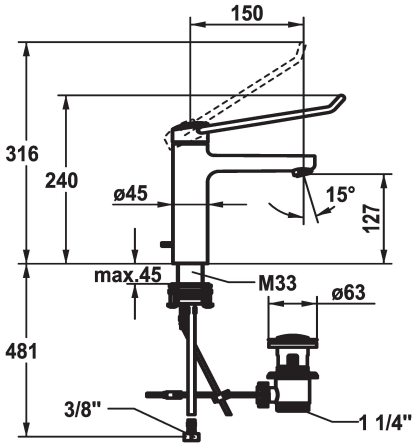

KWC-No.	ATT-KWC-ABLAUFGARNITUR
125228 chromeline, A 150, flexible connection hoses, with pop-up valve	mit_Ablaufgarnitur
125229 chromeline, A 150, flexible connection hoses, without pop-up valve	ohne_Ablaufgarnitur

* Lever mixer
* Operation designed for a secure grip, as well as safe and easy handling
* Ergonomic and robust operating lever, made of polyamide
- to adjust the handling even better to suit personal requirements, the offset lever can be installed so that it is twisted into the cap (standard: see illustration)
* EcoProtect - water-saving device
* Fixed spout
- Neoperl® Perlator® laminar
* KWC cartridge with safety device M 35 OP

- with ceramic discs
- flow rate and temperature continuously variable
- temperature limitation
- Reinforced stopper for output volume and temperature (standard setting)
* Flexible connection hoses 3/8"
* QuickInstallation - Fastening via threaded connection with locking screws
* Mounting hole size ø35 mm
* Scope of delivery:
- KWC pop-up valve Z.538.581.000

Technické údaje

A_Spout_Spray	5.8 l/min (3 bar)
ATT-KWC-ABLAUFGARNITUR	mit_Ablaufgarnitur
Connection	Flexible_Anschlussschläuche
ATT-KWC-AUSLAUF	fixovaná
Handling	topbedient
ATT-KWC-FARBCODE	chromeline
Installation_type	Standmontage
Faucet_typ	Hebelmischer
Measure_Height	240
G_Acoustic group	I
Projection_A	A150
EnergyLabelCH	A
ATT-KWC-MASS-WASSERAUSTRITT	127
Materiál	mosaz