KWC WAMAS 2.0
Trim kit - Lever mixer - Shower

Modell-Linie: WAMAS 2.0 | 21.474.500.000
Sprchové armatury | Hydraulické sprchy

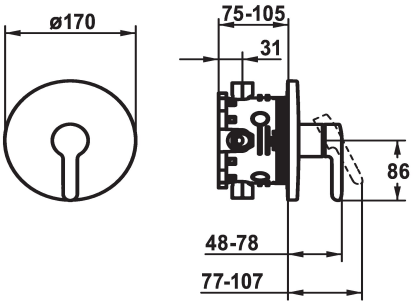

KWC-No.

125171
chromeline, Trim kit

* Trim kit with function unit
* Outflow top or below
* KWC cartridge M 35 H
- with ceramic discs
- flow rate and temperature continuously variable
* Scope of delivery:
- Function unit, lever, cap, sleeve, cover plate, holder for escutcheon
- Fastening of the cover plate without screws
* To be ordered separately:
- Unit for concealed installation KWC BLUEBOX®
½", without shut-off valve, 39.999.900.931
¾" (½"), with shut-off valve, 39.999.910.931

Technické údaje

ATT-KWC-A_ABGANG_UP	19 l/min (3 bar)
ATT-KWC-DURCHMESSER	D170
Handling	frontbedient
ATT-KWC-FARBCODE	chromeline
Installation_type	montáž na stěnu
Faucet_typ	Hebelmischer
G_Acoustic group	I
ATT-KWC-UNTERPUTZ	FM-Set
EnergyLabelCH	C
Materiál	mosaz

C

Volitelné příslušenství

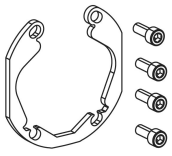

BLUEBOX Alignment set

537593

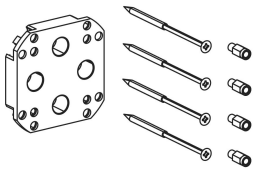

BLUEBOX Extension set 15 mm

537595

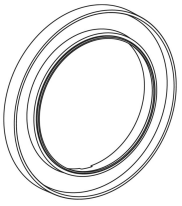

BLUEBOX Excutcheon extension

537600

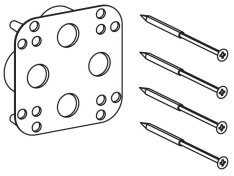

BLUEBOX Reverse adapter

537953

KWC WAMAS 2.0
Trim kit - Lever mixer - Shower

Modell-Linie: WAMAS 2.0 | 21.474.500.000
Sprchové armatury | Hydraulické sprchy

Z.537.593	Z.537.595	Z.537.600	Z.537.953

Náhradní díly

Cartridge M 35 H

538327
Z.537.582