KWC LUNA E
Lever mixer - Kitchen

Modell-Linie: LUNA E | 10.445.023.000FL
Taps | Manual taps

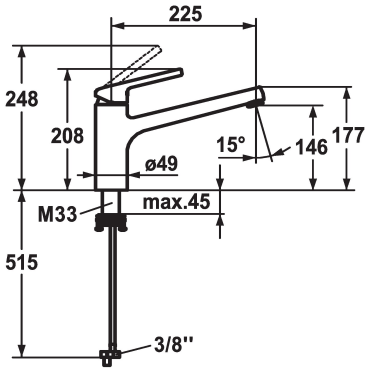

KWC-No.

125137
chromeline, A225

* Lever mixer
* Swivel spout 160°
- Neoperl® Cascade®
* KWC cartridge M 35
- with ceramic discs
- flow rate and temperature continuously variable
* Flexible connection hoses ⅜"
* QuickInstallation - Fastening via threaded connection with locking screws
* Mounting hole size ø35 mm

Technical Data

Flow rate	6 l/min (3 bar)
Connection	Flexible connection hoses
Spout	swivel
Handling	side lever
Color_code	chrome
Installation_type	Pillar installation
Faucet_typ	Lever mixer
Dimension Height	208
Energysaving	low pressure
G_Acoustic group	I
Projection_A	A 225
Energy Label	A
Dimension Water outlet	146
material	Brass

Spare Parts

KWC LUNA E
Lever mixer - Kitchen

Modell-Linie: LUNA E | 10.445.023.000FL
Taps | Manual taps

Cartridge M 35 H
538327 Z.537.582