KWC LUNA E
Lever mixer - Kitchen

Modell-Linie: LUNA E | 10.441.043.000FL
Taps | Manual taps

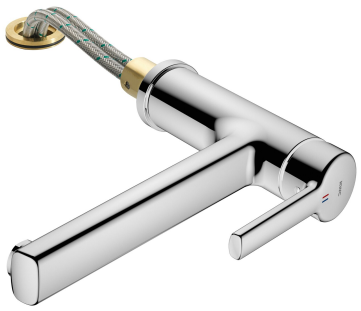

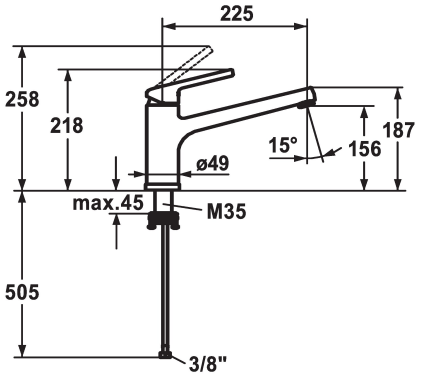

KWC-No.

125135
chromeline, A225

* Lever mixer
* Detachable for installation below windows - detached 55 mm
* Swivel spout 160°
- Neoperl® Cascade®
* KWC cartridge M 35
- with ceramic discs
- flow rate and temperature continuously variable
* Flexible connection hoses ⅜"
* Fastening by means of threaded sleeve M35 x 1.5 (preassembled socket)
* Mounting hole size ø35 - 37 mm

Technical Data

Flow rate	12 l/min (3 bar)
Connection	Flexible connection hoses
Spout	swivel
Detachable	detachable
Handling	top lever
Color code	chromeline
Installation type	Pillar installation
Faucet_typ	Lever mixer
Dimension Height	218
Acoustic group	I
Projection A	A 225
Energy label	B
Dimension Water outlet	156
material	Brass

B

Spare Parts

KWC LUNA E
Lever mixer - Kitchen

Modell-Linie: LUNA E | 10.441.043.000FL
Taps | Manual taps

Cartridge M 35 H

538327
Z.537.582