KWC AVA 2.0
Lever mixer - Basin

Modell-Linie: AVA 2.0 | 12.468.093.000FL
Taps | Manual taps

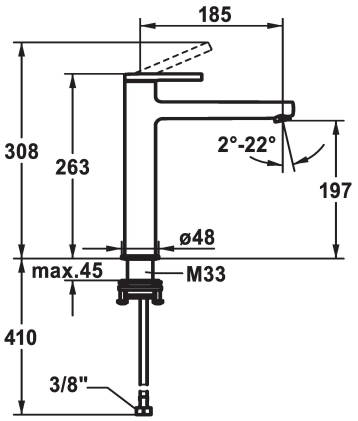

KWC-No.	Pop-up_valve
125100 chromeline, A 185, flexible connection hoses, without pop-up valve	without pop-up valve
125101 chromeline, A 185, flexible connection hoses, with Push Open	with Push open

* For top-mounted basins
* EcoProtect - water-saving device
* Fixed spout
- Neoperl® Perlator® SSR, swivelling jet regulator
* OptimalSpace - ample space for washing or working
* KWC cartridge S 25

- with ceramic discs
- flow rate and temperature continuously variable
* Flexible connection hoses 3/8"
* QuickInstallation - Fastening via threaded connection with locking screws
* Mounting hole size ø35 mm

Technical Data

Flow rate	5 l/min (3 bar)
Pop-up_valve	without pop-up valve
Connection	Flexible connection hoses
Spout	fixed
Handling	top lever
Color code	chrome
Installation_type	for top-mounted sinks
Faucet_typ	Lever mixer
Dimension Height	263
G_Acoustic group	I
Projection_A	A 185
Energy Label	A
Dimension Water outlet	197
material	Brass