KWC SHOWERCULTURE
Shower system

Modell-Linie: SHOWERCULTURE | 26.006.013.000
Sprchové armatury | Sprchové armatury

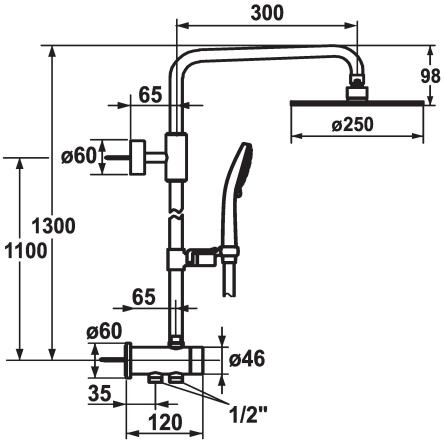

KWC-No.

124898
chromeline, A 300, L 1100, with hand shower and hose

* Shower system Modification set fit
* Suitable for connection to surface-mounted mixer
* TouchProtect - anti-scald protection thanks to the “double skin” principle
* The water-bearing sliding wall bar can be shortened to any individual length as required
* SkinProtect - Safety stop prevents scalding
* Turning handle to control flow and for diverter
* KWC ball joint bracket, elevation adjustment lockable
* Tube diameter 20 mm

* Scope of delivery:
- Diverter with outlet (top) for water-bearing sliding wall bar
- Hand shower KWC FIT-E trio 26.000.132.000
- Shower hose 1600 mm, plastic 26.001.003.000 and 1000 mm (can be shortened), plastic 26.001.009.000
-Shower head KWC PIATTO -X R250 26.000.214.000
- Sliding wall bar kit 26.004.003.000
- Shower guide rod holder (top), for connecting guide rod and spray arm

Technické údaje

ATT-KWC-BRAUSEGARNITUR	mit_Brause,_Schlauch
ATT-KWC-FARBCODE	chromeline
Installation_type	montáž na stěnu
Faucet_typ	DuSys Komponenten
Measure_Height	1300
Projection_A	A300
Measure_L	L1100
Materiál	mosaz