KWC ELLA
Lever mixer - Basin - CoolFix

Modell-Linie: ELLA | 12.381.033.000FL
Kranar | Hydraulické armatury

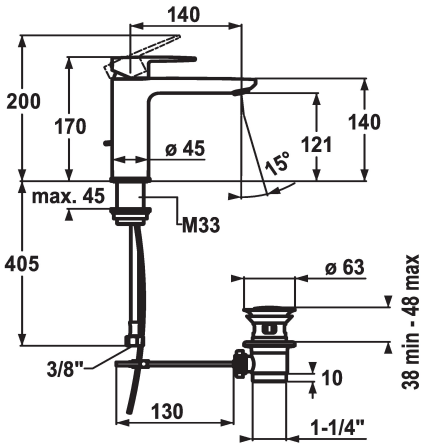

KWC-No.	ATT-KWC-ABLAUFGARNITUR
124644 chromeline, A 140, flexible connection hoses, with pop-up valve	mit_Ablaufgarnitur
124645 chromeline, A 140, flexible connection hoses, without pop-up valve	ohne_Ablaufgarnitur

* Lever mixer
* CoolFix - Cold water flow with a centered lever
* EcoProtect - water-saving device
* Fixed spout
- Neoperl® Perlator® Shorty
* OptimalSpace - ample space for washing or working
* KWC cartridge M 35 OP

- with ceramic discs
- flow rate and temperature continuously variable
- temperature limitation
* Flexible connection hoses ⅜"
* Fastening by means of threaded sleeve M33 x 1.5
* Mounting hole size ø35 mm

Technical Data
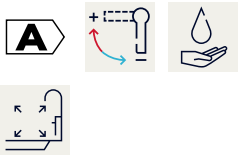
A_Spout_Spray	5 l/min (3 bar)
ATT-KWC-ABLAUFGARNITUR	mit_Ablaufgarnitur
Connection	Flexible_Anschlussschläuche
ATT-KWC-AUSLAUF	fest
Handling	topbedient
ATT-KWC-FARBCODE	chromeline
Installation_type	Standmontage
Faucet_typ	Hebelmischer
Measure_Height	170
ATT-KWC-ENERGIESPAREN	Coolfix
G_Acoustic group	I
Projection_A	A140
EnergyLabelCH	A
ATT-KWC-MASS-WASSERAUSTRITT	121
Material	Mässing