**KWC** ELLA
Lever mixer - Basin

**Modell-Linie: ELLA | 12.381.043.000FL**
Taps | Manual taps

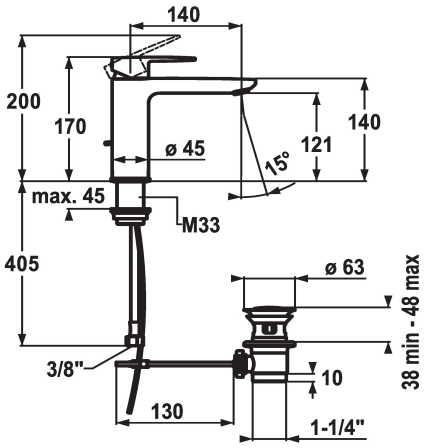


| KWC-No. | pop-up assembly |
|---|---|
| **124642**<br>chromeline, A 140, flexible connection hoses, with pop-up valve | with pop-up valve |
| **124643**<br>chromeline, A 140, flexible connection hoses, without pop-up valve | without pop-up valve |

* Lever mixer
* EcoProtect - water-saving device
* Fixed spout
- Neoperl® Perlator® Shorty
* OptimalSpace - ample space for washing or working
* KWC cartridge M 35 OP

- with ceramic discs
- flow rate and temperature continuously variable
- temperature limitation
* Flexible connection hoses ⅜"
* Fastening by means of threaded sleeve M33 x 1.5
* Mounting hole size ø35 mm

**Technical Data**

| | |
|---|---|
| Flow rate | 5 l/min (3 bar) |
| pop-up assembly | with pop-up valve |
| Connection | Flexible connection hoses |
| Spout | fixed |
| Handling | top lever |
| Color code | chromeline |
| Installation type | Pillar installation |
| Faucet_typ | Lever mixer |
| Dimension Height | 170 |
| Acoustic group | I |
| Projection A | A 140 |
| Energy label | A |
| Dimension Water outlet | 121 |
| material | Brass |