KWC DOMO 6.0
Lever mixer - Basin

Modell-Linie: DOMO 6.0 | 12.668.021.000FL
Armatura umywalkowa | Armatura jednouchwytowa

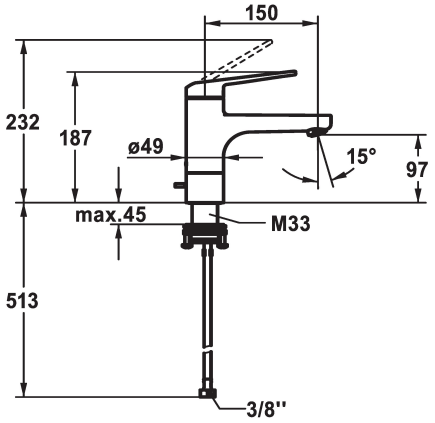

KWC-No.	ATT-KWC-ABLAUFGARNITUR
124561 chromeline, A 150, flexible connection hoses, with pop-up valve	mit_Ablaufgarnitur
124562 chromeline, A 150, flexible connection hoses, without pop-up valve	ohne_Ablaufgarnitur

* Lever mixer
* EcoProtect - water-saving device
* Swivel spout 90°
- Neoperl® Cascade® SLC
* OptimalSpace - ample space for washing or working
* KWC cartridge M 35 S
- with ceramic discs
- flow rate and temperature continuously variable
- temperature limitation
* Flexible connection hoses ⅜"
* QuickInstallation - Fastening via threaded connection with locking screws
* Mounting hole size ø35 mm

Dane techniczne
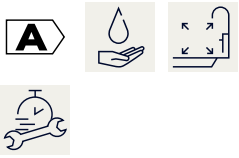
A_Spout_Spray	5 l/min (3 bar)
ATT-KWC-ABLAUFGARNITUR	ohne_Ablaufgarnitur
Connection	Flexible_Anschlussschläuche
ATT-KWC-AUSLAUF	schwenkbar
Handling	topbedient
ATT-KWC-FARBCODE	chromeline
Installation_type	Standmontage
Faucet_typ	Hebelmischer
Dimension Height	187
G_Acoustic group	I
Projection_A	A150
EnergyLabelCH	A
ATT-KWC-MASS-WASSERAUSTRITT	97
Materiał	Mosiądz