KWC DOMO 6.0
Lever mixer - Basin

Modell-Linie: DOMO 6.0 | 12.668.011.000FL
Taps | Manual taps

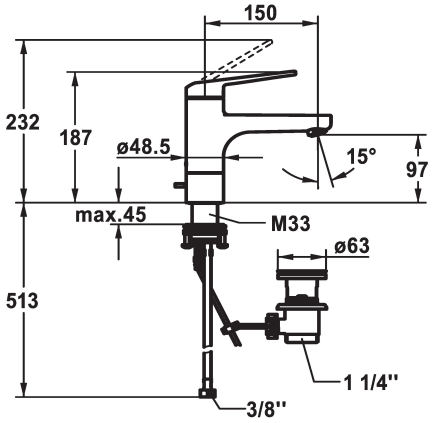

KWC-No.	pop-up assembly
124561 chromeline, A 150, flexible connection hoses, with pop-up valve	with pop-up valve
124562 chromeline, A 150, flexible connection hoses, without pop-up valve	without pop-up valve

* Lever mixer
* EcoProtect - water-saving device
* Swivel spout 90°
- Neoperl® Cascade® SLC
* OptimalSpace - ample space for washing or working
* KWC cartridge M 35 S
- with ceramic discs
- flow rate and temperature continuously variable
- temperature limitation
* Flexible connection hoses ⅜"
* QuickInstallation - Fastening via threaded connection with locking screws
* Mounting hole size ø35 mm
* Scope of delivery:
- KWC pop-up valve Z.538.581.000

Technical Data
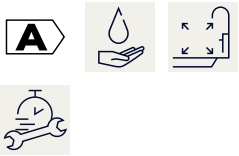
Flow rate	5 l/min (3 bar)
pop-up assembly	with pop-up valve
Connection	Flexible connection hoses
Spout	swivel
Handling	top lever
Color code	chromeline
Installation type	Pillar installation
Faucet_typ	Lever mixer
Dimension Height	187
Acoustic group	I
Projection A	A 150
Energy label	A
Dimension Water outlet	97
material	Brass