KWC DOMO 6.0
Lever mixer - Basin - CoolFix

Modell-Linie: DOMO 6.0 | 12.668.072.000FL
Hanat | Käsikäyttöiset hanat

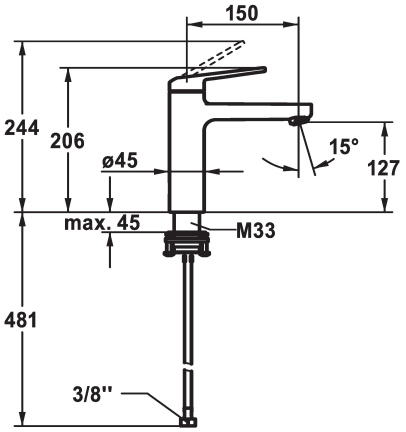

KWC-No.	ATT-KWC-ABLAUFGARNITUR
124554 chromeline, A 150, flexible connection hoses, with pop-up valve	mit_Ablaufgarnitur
124555 chromeline, A 150, flexible connection hoses, without pop-up valve	ohne_Ablaufgarnitur

* Lever mixer
* CoolFix - Cold water flow with a centered lever
* EcoProtect - water-saving device
* Fixed spout
- Neoperl® Cascade® SLC
* OptimalSpace - ample space for washing or working
* KWC cartridge M 35 OP

- with ceramic discs
- flow rate and temperature continuously variable
- temperature limitation
* Flexible connection hoses ⅜"
* QuickInstallation - Fastening via threaded connection with locking screws
* Mounting hole size ø35 mm

Tekniset tiedot

A_Spout_Spray	4 l/min (3 bar)
ATT-KWC-ABLAUFGARNITUR	ohne_Ablaufgarnitur
Connection	Flexible_Anschlussschläuche
Spout	Kiinnitetty
Handling	topbedient
Värikoodi	chromeline
Installation_type	Standmontage
Faucet_typ	Hebelmischer
Measure_Height	206
ATT-KWC-ENERGIESPAREN	Coolfix
G_Acoustic group	I
Projection_A	A150
EnergyLabelCH	A
ATT-KWC-MASS-WASSERAUSTRITT	127
Materiaali	Messinki
IviCode	0

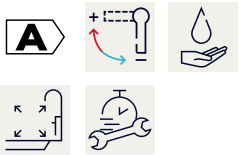

Varaosat

KWC DOMO 6.0
Lever mixer - Basin - CoolFix

Modell-Linie: DOMO 6.0 | 12.668.072.000FL
Hanat | Käsikäyttöiset hanat

Cartridge M 35 OP

538331
Z.537.710