KWC DOMO 6.0
Lever mixer - Basin

Modell-Linie: DOMO 6.0 | 12.668.041.000FL
Umyvadlové armatury | Hydraulické armatury

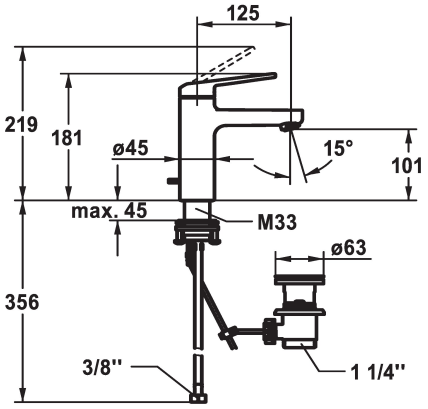

KWC-No.	ATT-KWC-ABLAUFGARNITUR
124546 chromeline, A 125, flexible connection hoses, with pop-up valve	mit_Ablaufgarnitur
124547 chromeline, A 125, flexible connection hoses, without pop-up valve	ohne_Ablaufgarnitur

* Lever mixer
* EcoProtect - water-saving device
* Fixed spout
- Neoperl® Cascade® SLC
* KWC cartridge M 35 OP
- with ceramic discs
- flow rate and temperature continuously variable
- temperature limitation
* Flexible connection hoses ⅜"
* QuickInstallation - Fastening via threaded connection with locking screws
* Mounting hole size ø35 mm
* Scope of delivery:
- KWC pop-up valve Z.538.581.000

Technické údaje

A_Spout_Spray	4 l/min (3 bar)
ATT-KWC-ABLAUFGARNITUR	mit_Ablaufgarnitur
Connection	Flexible_Anschlussschläuche
ATT-KWC-AUSLAUF	fixovaná
Handling	topbedient
ATT-KWC-FARBCODE	chromeline
Installation_type	Standmontage
Faucet_typ	Hebelmischer
Measure_Height	181
G_Acoustic group	I
Projection_A	A125
EnergyLabelCH	A
ATT-KWC-MASS-WASSERAUSTRITT	101
Materiál	mosaz

Náhradní díly

KWC DOMO 6.0
Lever mixer - Basin

Modell-Linie: DOMO 6.0 | 12.668.041.000FL
Umyvadlové armatury | Hydraulické armatury

Cartridge M 35 OP

538331
Z.537.710