KWC ISLA
Lever mixer - Kitchen

Modell-Linie: ISLA | 10.371.023.000FL
Armatura umywalkowa | Armatura jednouchwytowa

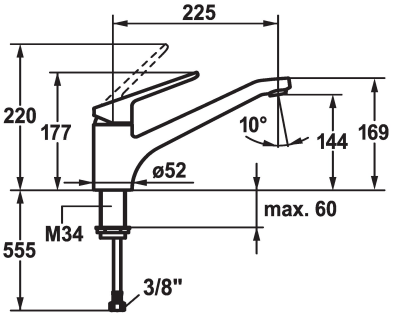

KWC-No.

123995
chromeline, A 225, flexible connection hoses

* Lever mixer
* Swivel spout 160°
- Neoperl® Cascade®
* KWC cartridge M 35 H
- with ceramic discs
- flow rate and temperature continuously variable
* Flexible connection hoses ⅜"
* Fastening by means of threaded sleeve M34 x 1
* Mounting hole size ø35 mm

Dane techniczne

A_Spout_Spray	14 l/min (3 bar)
Connection	Flexible_Anschlussschläuche
ATT-KWC-AUSLAUF	schwenkbar
Handling	topbedient
ATT-KWC-FARBCODE	chromeline
Installation_type	Standmontage
Faucet_typ	Hebelmischer
Dimension Height	177
G_Acoustic group	II
Projection_A	A225
EnergyLabelCH	C
ATT-KWC-MASS-WASSERAUSTRITT	164
Materiał	Mosiądz

Części zamienne

KWC ISLA
Lever mixer - Kitchen

Modell-Linie: ISLA | 10.371.023.000FL
Armatura umywalkowa | Armatura jednouchwytowa

Cartridge M 35 H

538327
Z.537.582