KWC SUNO
Lever mixer - Kitchen - detachable

Modell-Linie: SUNO | 10.171.053.000FL
Hanat | Käsikäyttöiset hanat

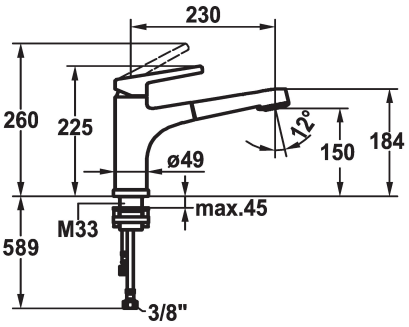

KWC-No.

123963
chromeline, A 230, flexible connection hoses

* Lever mixer
* Detachable for installation below windows - detached 55 mm
* TouchProtect - anti-scald protection thanks to the “double skin” principle
* Intrinsically safe against backflow
* Pull-out spray
- SprayClean - easy to clean and actively prevents limescale buildup
- up to 600 mm pull-out length
- PowerClean - needle spray mode, with automatic diverter reset
- hose surface to fit faucet surface
* Hose guide, swivelling 130°
* EasyLock - a pull-out spray that easily slides back into place
* KWC cartridge M 35 H
- with ceramic discs
- flow rate and temperature continuously variable
* Flexible connection hoses 3/8"
* Fastening by means of threaded sleeve M35 x 1.5 (preassembled socket)
* Mounting hole size ø35 - 37 mm

Tekniset tiedot

ATT-KWC-A_AUSZUGBRAUSE_SIEB	11 l/min (3 bar)
ATT-KWC-A_AUSZUGBRAUSE_NORMAL	11 l/min (3 bar)
Connection	Flexible_Anschlussschläuche
Spout	schwenkbar
ATT-KWC-UNTERFENSTER	wegnehmbar
Handling	topbedient
Kitchen_spray	Auszugbrause
Värikoodi	chromeline
Installation_type	Standmontage
Faucet_typ	Hebelmischer
Measure_Height	225
G_Acoustic group	I
Projection_A	A230
EnergyLabelCH	B
ATT-KWC-MASS-WASSERAUSTRITT	150
Materiaali	Messinki
IviCode	0

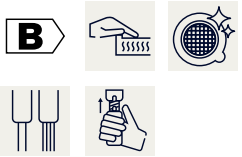

Varaosat

KWC SUNO
Lever mixer - Kitchen - detachable

Modell-Linie: SUNO | 10.171.053.000FL
Hanat | Käsikäyttöiset hanat

Toimiosa

536570
Z.534.836