KWC EVE
Lever mixer - kitchen

Modell-Linie: EVE | 10.111.103.150FL
Taps | Manual taps

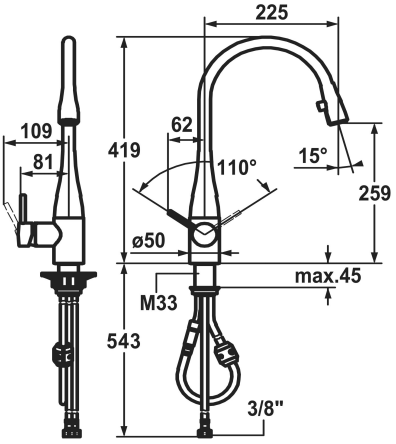

KWC-No.	Color_code
121241 chromeline, A 225, flexible connection hoses	chrome
121326 stainless steel, A 225, flexible connection hoses	stainless steel
122906 glacier white, A 225, flexible connection hoses	glacier white
122907 black chrome plated, A 225, flexible connection hoses	black chrome-plated

KWCEVE kitchen w/o.light A225 glacier white,pull-out aerator side lever, flex-PEX 3/8"

Technical Data

A_Spout_Spray	11 l/min (3 bar)
Connection	Flexible connection hoses
Spout	swivel
Handling	side lever
Kitchen_spray	Pull-out aerator
Color_code	glacier white
Installation_type	Pillar installation
Faucet_typ	Lever mixer
Measure_Height	419
G_Acoustic group	I
Projection_A	A 225
EnergyLabelCH	B
Dimension Water outlet	259
material	Brass

Spare Parts

KWC EVE
Lever mixer - kitchen

Modell-Linie: EVE | 10.111.103.150FL
Taps | Manual taps

Control cartridge

536570
Z.534.836

Service key Neoperl © Caché ©, TJ, 18 mm, green

634729
Z.634.729