KWC LIVELLO
Lever mixer - Kitchen

Modell-Linie: LIVELLO | 10.231.013.700FL
Hanat | Käsikäyttöiset hanat

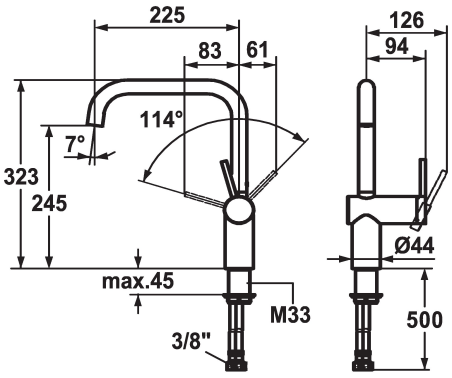

KWC-No.	Värikoodi
122297 chromeline, A 225, flexible connection hoses	chromeline
122298 stainless steel, A 225, flexible connection hoses	stainless steel

* Lever mixer
* Lever installation only possible on the right side
- Child safety: cold water flow in lever position towards the front
* gap between wall and centre of mounting hole min. 65 mm
* Swivel spout 125° , extensible to 360°
- Neoperl® Caché®
* OptimalSpace - ample space for washing or working

* KWC cartridge M 35 H
- with ceramic discs
- flow rate and temperature continuously variable
* Flexible connection hoses ⅜"
* Fastening by means of threaded sleeve M33 x 1.5
* Mounting hole size ø35 mm

Tekniset tiedot

A_Spout_Spray	11 l/min (3 bar)
Connection	Flexible_Anschlussschläuche
Spout	schwenkbar
Handling	seitenbedient
Värikoodi	stainless steel
Installation_type	Standmontage
Faucet_typ	Hebelmischer
ATT-KWC-BAUFORM	L-Spout
Measure_Height	323
G_Acoustic group	II
Projection_A	A225
EnergyLabelCH	B
ATT-KWC-MASS-WASSERAUSTRITT	245
Materiaali	ROSTFREIER_STAHL
IviCode	0

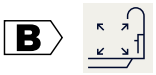

Varaosat

KWC LIVELLO
Lever mixer - Kitchen

Modell-Linie: LIVELLO | 10.231.013.700FL
Hanat | Käsikäyttöiset hanat

Cartridge M 35 H

538327
Z.537.582

Service key Neoperl © Caché ©, JR, 21 mm, red

639017
Z.635.215