KWC GASTRO
Lever mixer - Commercial kitchen

Modell-Linie: GASTRO | 24.501.054.000
Taps | Manual taps

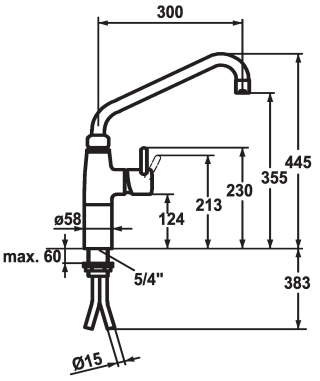

KWC-No.	Projection_A
121269 chromeline, A 300, copper tubes	A 300
121270 chromeline, A 450, copper tubes	A 450

* Lever mixer
* Pillar 100 mm
* Swivel spout 360°
- with adjustable gland
- Jet regulator
* OptimalSpace - ample space for washing or working
* KWC cartridge XL 46 - high capacity

- with ceramic discs
- flow rate and temperature continuously variable
- temperature limitation
* Copper tubes ø15 mm
* Fastening by means of threaded sleeve 1 ¼"
* Mounting hole size ø42 mm

Technical Data
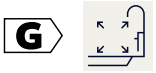
Flow rate	40 l/min (3 bar)
Connection	Copper tubes
Spout	swivel
Handling	side lever
Color_code	chrome
Installation_type	Pillar installation
Faucet_typ	Lever mixer
Dimension Height	445
G_Acoustic group	U
Projection_A	A 300
Dimension Water outlet	355