KWC GASTRO
Two-handle mixer

Modell-Linie: GASTRO | K.24.41.A2.000C07
Kranar | Hydraulické armatury

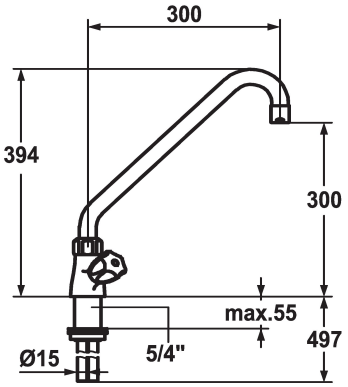

KWC-No.

101755
chromline, A 300, B 300, C 394

* Two-handle mixer
* KWC CORONA metal handles, removable
* Swivel spout 360°
- with adjustable gland
- Jet regulator
* OptimalSpace - ample space for washing or working

* Flat valves M20 x 1.25
- stainless steel valve seat
* Copper tubes ø15 mm
* Fastening by means of threaded sleeve 1 ¼"
* Mounting hole size ø42 mm

Technical Data

A_Spout_Spray	98 l/min (3 bar)
ATT-KWC-AUSLADUNG_C	C394
Connection	Kupferrohranschlüsse
Projection_B	B300
ATT-KWC-FARBCODE	chromeline
Installation_type	Standmontage
Faucet_typ	Zweigriffmischer
Measure_Height	394
G_Acoustic group	U
Projection_A	A300
ATT-KWC-MASS-WASSERAUSTRITT	300
Material	Mässing