KWC GASTRO
Two-handle mixer - Commercial kitchen

Modell-Linie: GASTRO | K.24.41.34.000C07
Umyvadlové armatury | Hydraulické armatury

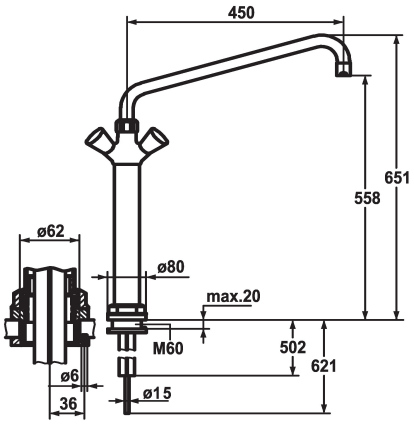

KWC-No.	Projection_A
100931 chromeline, A 300, copper tubes	A300
100933 chromeline, A 450, copper tubes	A450

* Two-handle mixer
* Pillar 300 mm
* KWC CORONA metal handles, removable
* Automatic outlet draining
* Preassembled socket
* Swivel spout 360°
- with adjustable gland

- Jet regulator
* OptimalSpace - ample space for washing or working
* Flat valves M20 x 1.25
- stainless steel valve seat
* Copper tubes ø15 mm
* Mounting hole size ø62 mm

Technické údaje

A_Spout_Spray	60 l/min (3bar)
Connection	Kupferrohranschlüsse
ATT-KWC-AUSLAUF	schwenkbar
ATT-KWC-FARBCODE	chromeline
Installation_type	Standmontage
Faucet_typ	Zweigriffmischer
Measure_Height	651
G_Acoustic group	U
Projection_A	A450
ATT-KWC-MASS-WASSERAUSTRITT	558
Materiál	mosaz